■ THE CONFIGURATION COMBINE NMRV SPEC WITH MOTORS COUPLING FLANGE AND RATIO

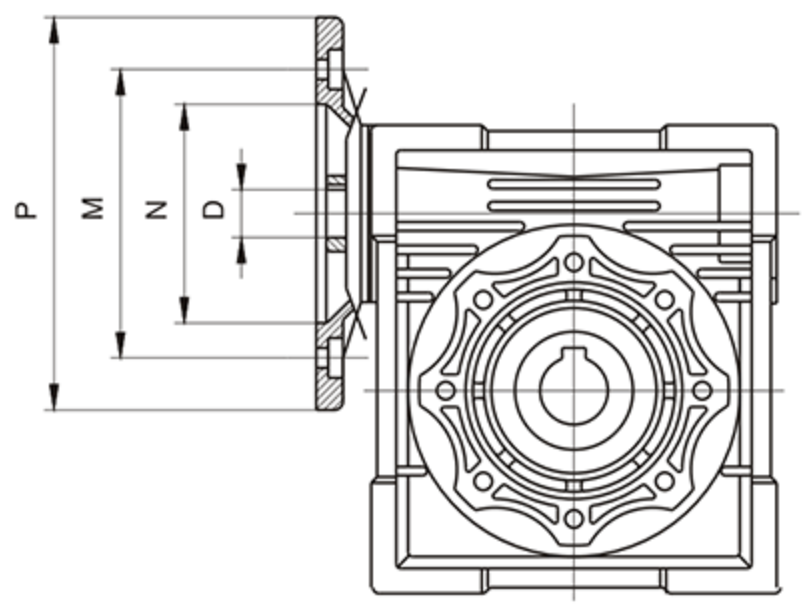

***If you want special key, please call our Technical Service**

	Motor flange				The hole diameter of input shaft										
	PAM	P	M	N	Transmission ratio										
	IEC				7.5	10	15	20	25	30	40	50	60	80	100
NMRV025	56B14	80	65	50	9	9	9	9	9	9	9	9	9		
NMRV030	63B5	140	115	95	11	11	11	11	11	11	11	11			
	63B14	90	75	60											
	56B5	120	100	80	9	9	9	9	9	9	9	9	9	9	
NMRV040	56B14	80	65	50											
	71B5	160	130	110	14	14	14	14	14	14	14				
	71B14	105	85	70											
	63B5	140	115	95	11	11	11	11	11	11	11	11	11	11	11
	63B14	90	75	60											
	56B5	120	100	80								9	9	9	9
NMRV050	80B5	200	165	130	19	19	19	19	19	19					
	80B14	120	100	80											
	71B5	160	130	110	14	14	14	14	14	14	14	14	14	14	
	71B14	105	85	70											
	63B5	140	115	95								11	11	11	11
NMRV063	90B5	200	165	130	24	24	24	24	24	24	24				
	90B14	140	115	95											
	80B5	200	165	130	19	19	19	19	19	19	19	19	19	19	
	80B14	120	100	80											
	71B5	160	130	110							14	14	14	14	14
	71B14	105	85	70											
NMRV075	110/112B5	250	215	180	28	28	28								
	110/112B14	160	130	110											
	90B5	200	165	130	24	24	24	24	24	24	24				
	90B14	140	115	95											
	80B5	200	165	130				19	19	19	19	19	19	19	19
	80B14	120	100	80											
	71B5	160	130	110								14	14	14	14
NMRV090	100/112B5	250	215	180	28	28	28	28	28	28					
	110/112B14	160	130	110											
	90B5	200	165	130	24	24	24	24	24	24	24	24	24		
	90B14	140	115	95											
	80B5	200	165	130							19	19	19	19	19
	80B14	120	100	80											
NMRV110	132B5	300	265	230	38*	38*	38*	38*							
	110/112B5	250	215	180	28	28	28	28	28	28	28	28	28		
	90B5	200	165	130					24	24	24	24	24	24	24
	80B5	200	165	130										19	19
NMRV130	132B5	300	265	230	38*	38*	38*	38*	38*	38*	38*				
	100/112B5	250	215	180					28	28	28	28	28	28	28
	90B5	200	165	130										24	24